NOTRE DAME UNIVERSITY

BANGLADESH

EEE Lab Report-10

Course Title: Electronic Devices and Circuits Lab

Course Code: EEE-2108

Experiment No: 10

Name of the Experiment: Diode Resistor logic gate by MOSFET

Date of Experiment: 12-10-23

Date of Submission: 19-10-23

Submitted by:

Group: B

Name: Istiak Alam

ID: 0692230005101005

Batch: CSE-20

Submitted To:

Dhiman Roy

Lecturer, NDUB

Experiment No 10

Name of experiment: Diode resistor logic gate by MOSFET

Theory: A Metal Oxide Semiconductor Field Effect Transistor or MOSFET can operate as an on/off switch by using the gate voltage to operate the transistor in the triode region & in the cutoff region.

Specifically, an NMOSFET behaves as a closed switch, exhibiting a very small resistance between its drain & source terminals when its gate voltage is "high", usually at the power-supply level V_{DD}, which represents a logic 1. Conversely, when the gate voltage is "low", which represents a logic 0, the transistor is cut off, thus conducting zero current & acting as an open switch.

We are using MOSFET to constructing Diode Resistor logic gate.

Equipment & Components:

1. e-type NMOSFET — IRFZ44N — 3 pieces
2. Resistor — 1kΩ — 2 pieces.
3. LEDs
4. Trainer Board
5. DC Power Supply
6. Digital multimeter
7. Chords and wires as required

Circuit Diagrams:

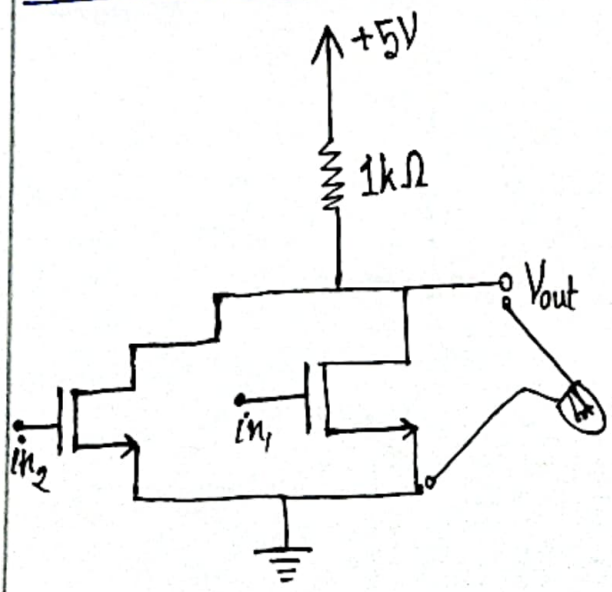

Fig 10.1: NMOSFET NOR Gate

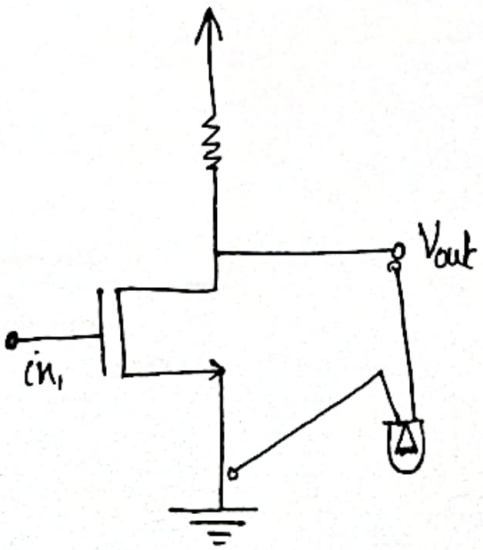

Fig 10.2: NMOSFET NOT Gate

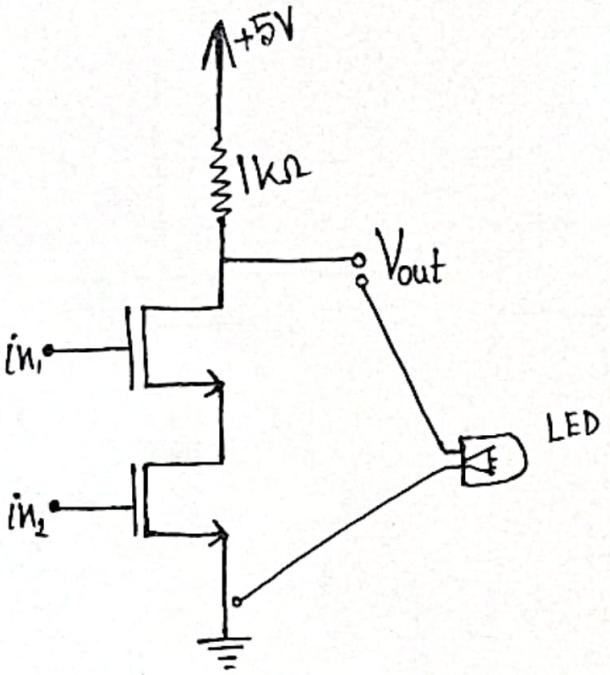

Fig 10·3: NMOSFET NAND Gate

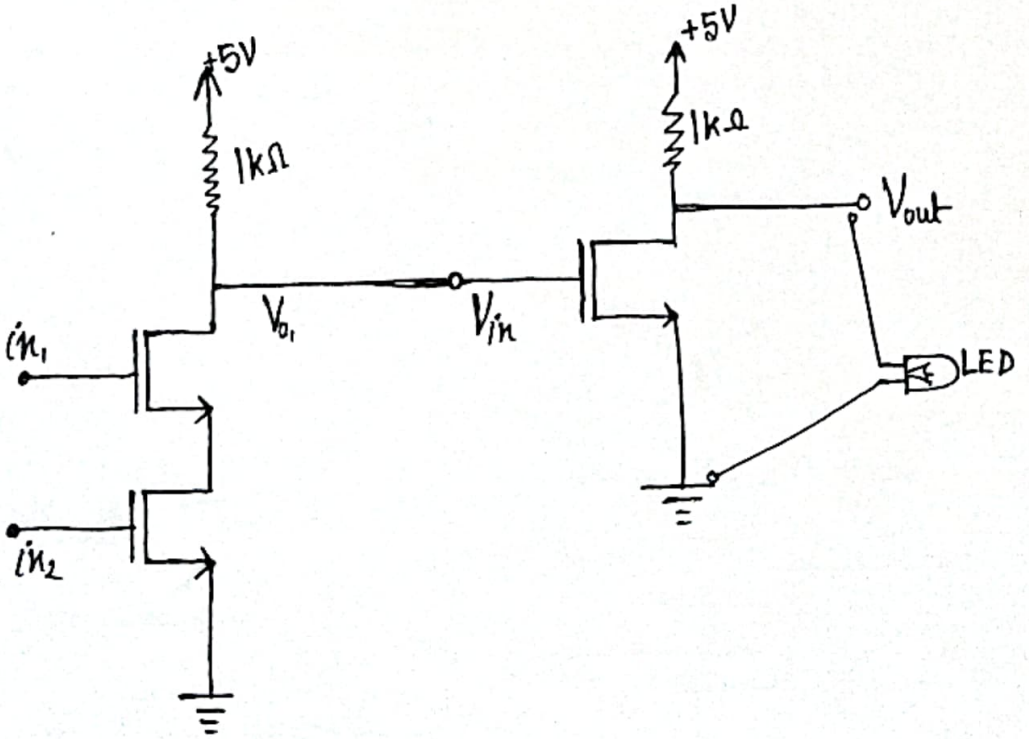

Fig 10·4: NMOSFET AND Gate

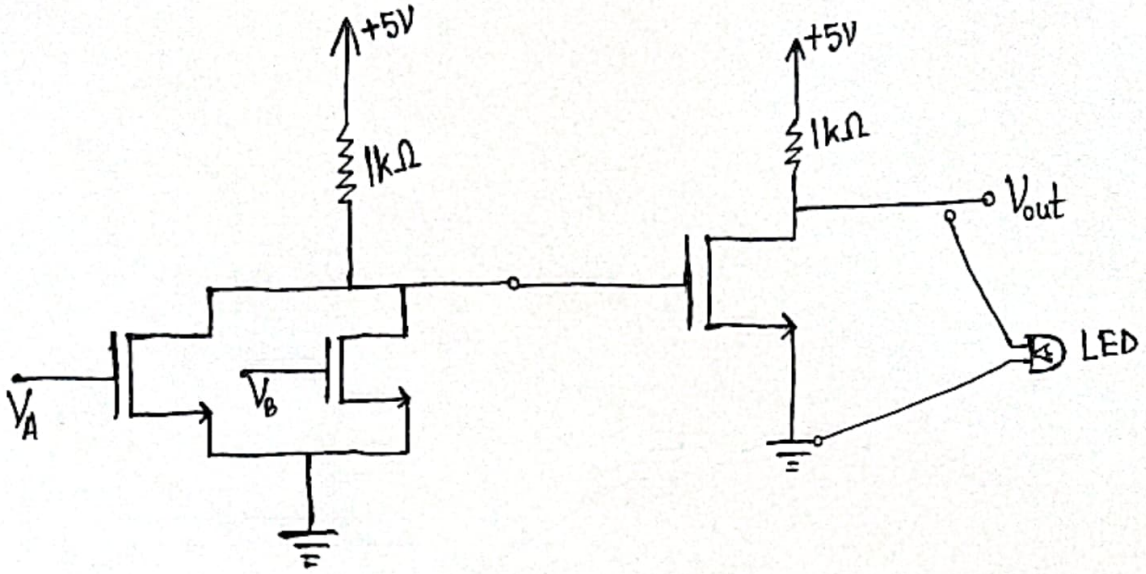

Fig 10.5: NMOSFET OR Gate.

Procedures:

1. Connect all the logic circuits shown in figures 10.1 - 10.5.
2. Test the truth tables by connecting an LED at the output.
3. Measure the voltage V_o for each output logic levels of the truth tables.

Discussion:

(i) use low voltage & current specifically.

(ii) Be careful with reverse voltage to prevent damage

(iii) Avoid overloading & short circuit.

(iv) Check the LED everytime before using.

(v) Avoiding mechanical error consciously.

(vi) Follow guidelines & manual.